Conference Proceedings 4th ICTB (2022)
https://doi.org/10.24451/dwve-0996

ICTB 2021 PLUS
4th International Conference on Timber Bridges
Biel/Bienne, Switzerland, 9 -12 May 2022

Robust Timber bridges without cladding

Frank Miebach[1], Germany

1 Introduction

Concerning the Eurocode 1995-2 for timber bridges the preferred design should be dimensioned for a lifespan of 100 years. That means, that only timber bridges with protection are possible and allowed. Hereby the focus is put on constructive elements to ensure a protected bridge:

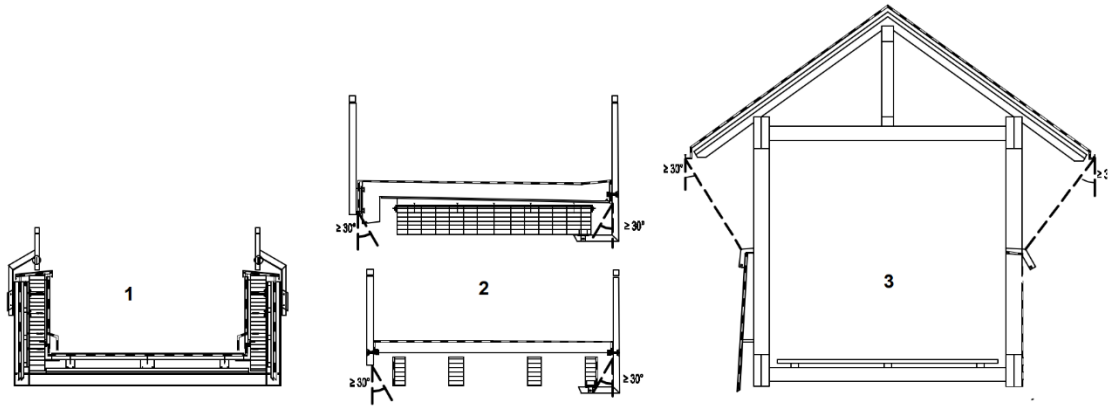

2 Examples for modern bridge designs without cladding

An easy and well known method of protection are claddings on top and the side areas of a construction. If you put a roof on top you get the so called “covered bridge”.So an additional element guarantees a water drainage against weathering. In the regulation of the EC 1995-2 is now introduced a fix angle for weathering with 30° out of the vertical line, so all elements behind this line can be seen as protected.

This leads to the simple idea to create new bridge designs without cladding – but with waterproof pavement on top. So a pavement function like a roof, and gives enough overhang for the structure.

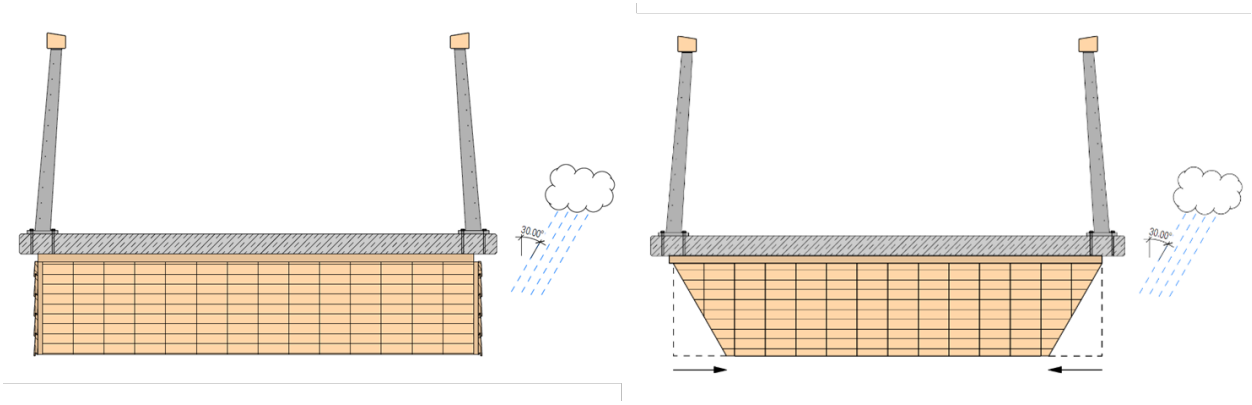

So different designs could be realized in the last years:

[1] Frank Miebach, Dipl.-Ing. (FH), Founder Ingenieurbüro Miebach, Germany, info@ib-miebach.de

Figure 1: Bridge – Schwäbisch Gmünd (GER) - 2012

2012: First time while stepped geometry follows a 30° angle for protection. Also innovative: waterproof pavement with huge granite plates and transversal gutters

Figure 2: Bridge – Neckartenzlingen (GER)

2017: Dominance of 30° rule follows function: first time with 2m high horizontal beams for bloc glued timber. Covering by overhanging prefab concrete slabs on top.

Figure 3: Bridge – Wangen/Allgäu (GER)

2020: efficient bridge Solution with parallel beams spans over 30m – covered with asphalt on top.

Figure 4: Bridge – Schäftersheim (GER)

2022: Solution for a timber concrete composite (TCC) bridge – also with stepped concrete plate

Figure 5: Bridge – Engelskirchen (GER)

2020: continuous stepped bloc glued beam with horizontal curvature

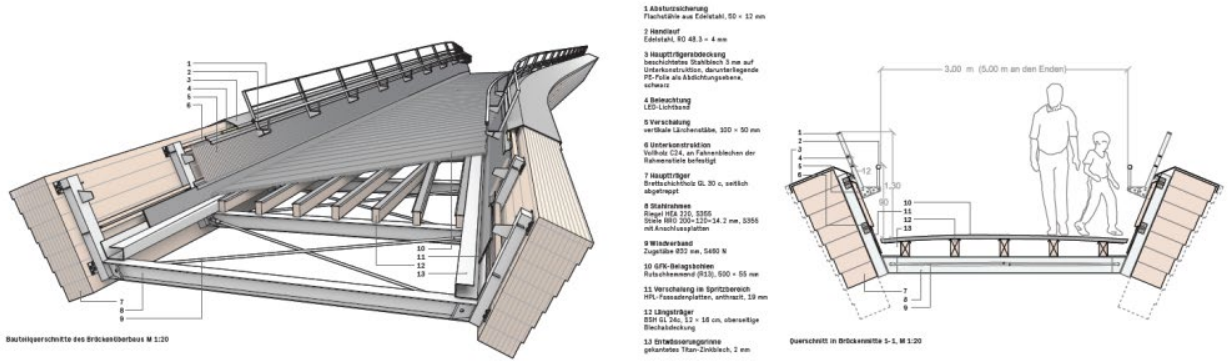

Figure 6: Bridge – Balingen (GER) *© moxon architects*

2022: asymmetric, double twisted beam tilted in 30° line – promising design for through bridges

Figure 7: Bridge – London (UK)

Competition design: arch bridge with cladding on top and interior – without cladding from the outside view

Figure 8: Bridge – Frankenberg (GER)

2022: Form follows static impact: timber design without cladding with correlating overhang of the concrete slabs.

Figure 9: Bridge over motorway A1 Paris (FR) *© exploration architecture, Paris*

In process: solid glulam structure well protected – and with fire resistance for over 120 minutes

Figure 10: competition Bridge – Kinding (GER)

Competition design: under tensioned beam in neighborhood of a historical roman stone bridge

3 Conclusion

The designing of timber bridges without a side cladding bings enormous benefit even for presenting the carrying structure. In the dialog with architects and clients the absence of claddings are perceived very positively, and it gains the possibility for better controlling of the construction. So we see the added value that timber can be demonstratively shown and is given better conditions, especially in competition with other materials.

Important note: the angle of 30° is not valid for all situations! Sometimes a higher value is strongly recommended – in relation to the climate conditions (especially wind driven rain) on site.